SR860



Mounting Pattern
200 x 200 up to
800 x 400mm

Max Load
125lb
(56.7kg)

SMARTMOUNT®

Flat Panel Cart

FOR 32" TO 75"+ DISPLAYS

The SR860 SmartMount® Flat Panel Cart provides all of the necessary features to support your mobile display deployment, whether that's in a boardroom or a classroom. The minimalistic, tubular design provides a clean aesthetic by hiding all cabling through the internal structure. The cart also includes a 20ft, 3-outlet power cord that is neatly stored in the rear hinging compartment. This protects the cord from damage, but also makes moving your display from room-to-room a breeze. The rear ABS molded cover helps hide any cabling, media players, or mini PCs, which means behind the display will not look cluttered if the cart is placed where the back is visible.







3-outlet extension cord is preinstalled through the cart tubing

REMOVABLE REAR COVER
Sits behind the rear of the display and provides a clean, concealed area for managing cabling and components (Shelf is made of ABS plastic; materials do not degrade WiFi signals)

HEIGHT ADJUSTMENT
Allows displays to be positioned 49.8" to 65.8" from the floor





The plug end and additional slack exits the cart tubing and is managed at the rear of the cart

HIDDEN CABLE MANAGEMENT
Hinged rear cover provides hidden storage for the power cable when moving or storing the cart

SAFE AND EASY MANEUVERABILITY
4" (102mm) dual-wheeled casters meet UL specifications and allow the cart to easily move across tile, carpet, and thresholds

- Improved leg design offers better movement around the display, such as when using a touch display or presenting to an audience
- Tube design and spacing allows for an easier way of transporting the display thanks to flexible handling locations
- Includes a preinstalled, 20ft, 3-outlet power cord for the display, media players, or mini PCs
- 32" x 11" fixed shelf provides a convenient place to set laptops, notebooks, pens, etc.
- Optional ACC-UCM accessory can be added to the rear of the cart for mounting of additional AV devices
- Complies with all criteria including load, tip and caster testing under UL1678 standards



Complies with ADA Standards for Accessible Design, Section 308



The frame design of the cart is optimized for storing multiple carts in a reduced footprint



The leg design allows the cart to easily pass through doorways as small as 30" (762mm) wide

RoHS TAA COMPLIANT

Please visit peerless-av.com/en-us/patents for patent information.

info@peerless-av.com
peerless-av.com

peerless-AV®
Driving Technology Through Innovation

Model Numbers

WARRANTY: Limited 5-year

SR860	SmartMount® Flat Panel Cart for 32" to 75"+ Displays

Product Specifications

	DIMENSIONS (W x H x D)	PRODUCT WEIGHT	LOAD CAPACITY	FINISH	AVAILABLE COLORS
SR860	35.49" x 77.09" x 28.99" (902 x 1958 x 736mm)	70lb (31.8kg)	125lb (56.7kg)	Textured Powder Coat	Black

Package Specifications

	PACKAGE SIZE (W x H x D)	PACKAGE SHIP WEIGHT	PACKAGE UPC CODE	PACKAGE CONTENTS	UNITS IN PACKAGE
SR860	47.75" x 38.25" x 7.00" (1213 x 972 x 178mm)	81.8lb (37.1kg)	735029350965	Right and Left Frames, Upright Tube, Steel Shelf, Universal Display Adaptor, (2) Swivel Casters, (2) Locking Swivel Casters, (3) Outlet Extension Cord, ABS Rear Cover, Hardware & Instructions	1

Accessories

ACC148:	6-Outlet Surge Protector, 15ft Cord with Mounting Bracket
ACC149:	(2) 600mm tall Adaptor Brackets
ACC151:	Replacement Caster Kit (2 locking, 2 non-locking)
ACC310:	Leveling Feet Accessory
ACC-SB2:	Large Universal Soundbar / VC Mount
ACC-UCM:	Universal AV Component Mount
ACC-V900X:	600, 800 and 900mm VESA® Adaptor

All dimensions = inch (mm)

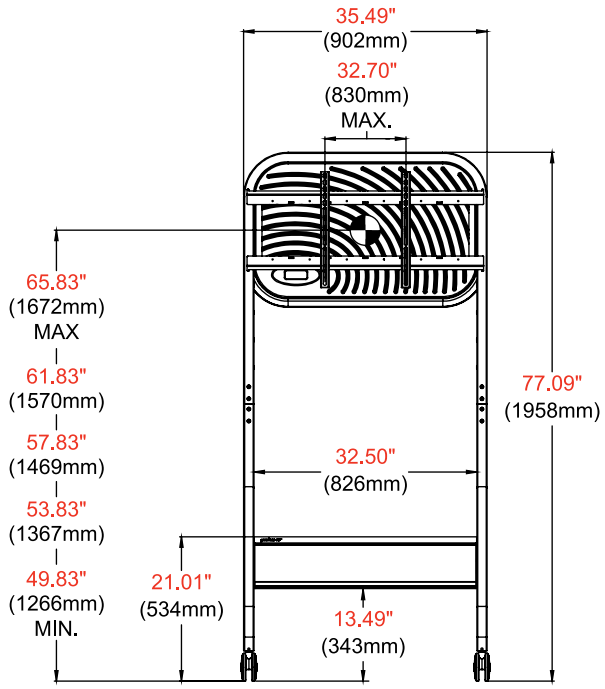

FRONT VIEW

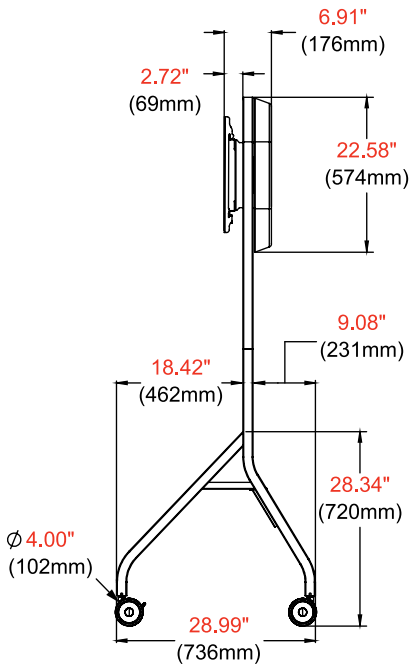

SIDE VIEW

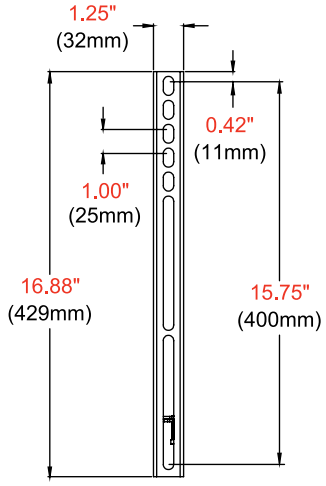

ADAPTOR DETAIL

Architect Specifications

The SmartMount® Flat Panel Cart shall be a Peerless-AV model SR860 and shall be located where indicated on the plans. Assembly and installation shall be done according to instructions provided by the manufacturer.

Visit peerless-av.com to see the complete line of AV solutions from Peerless-AV, including outdoor displays, kiosks, display mounts, projector mounts, carts/stands, and a full assortment of accessories.

Peerless-AV
2300 White Oak Circle
Aurora, IL 60502
USA
(800) 865-2112
(630) 375-5100

Peerless-AV EMEA
Unit 2 Curo Park
Frogmore, St. Albans
Hertfordshire, AL2 2DD
United Kingdom
+44 (0) 1923 200 100

Peerless-AV B.V.
Papendorpseweg 75
3528 BJ Utrecht
The Netherlands
+31 (0) 70 770 8037

Peerless-AV Latin America
Av. de las Industrias 413
Parque Industrial Escobedo
General Escobedo, N.L.,
México, 66062
+52 (81) 8384-8300

peerless-AV®
Driving Technology Through Innovation

© 2024 Peerless Industries, Inc. Peerless-AV® and SmartMount® are registered trademarks of Peerless Industries, Inc. All rights reserved.